Chassis drawing, F 86

Scale approx. 1:30

WHEELS	HJUL	RIMS FÄLG	TYRES DÄCK	D	E	F	G	H	I	J	K	L	M	N
DISC WHEELS	SKIVHJUL	7"	11,00×20	892	948	79	169	270	48	1924	2328	1054	1740	54
— " —	— " —	7,5"	11,00×20	905	961	95	185	286	38	1918	2350	1087	1740	43
SPOKE WHEELS	EKERHJUL	7,5"	11,00×20	905	961	95	185	286	35	1944	2350	1087	1743	46

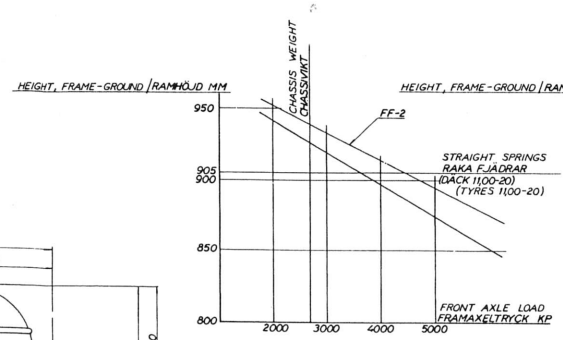

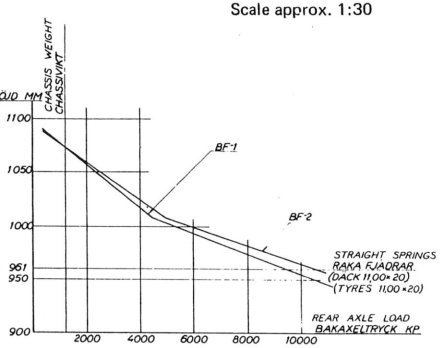
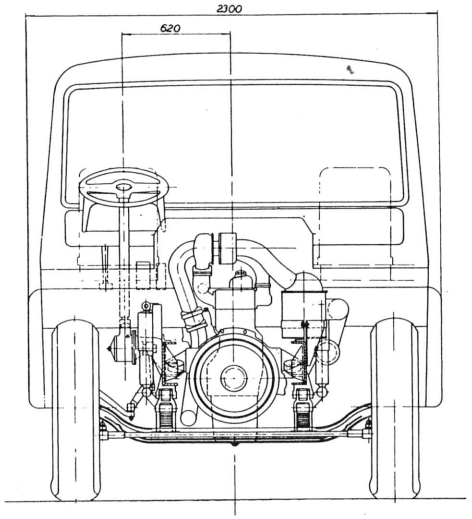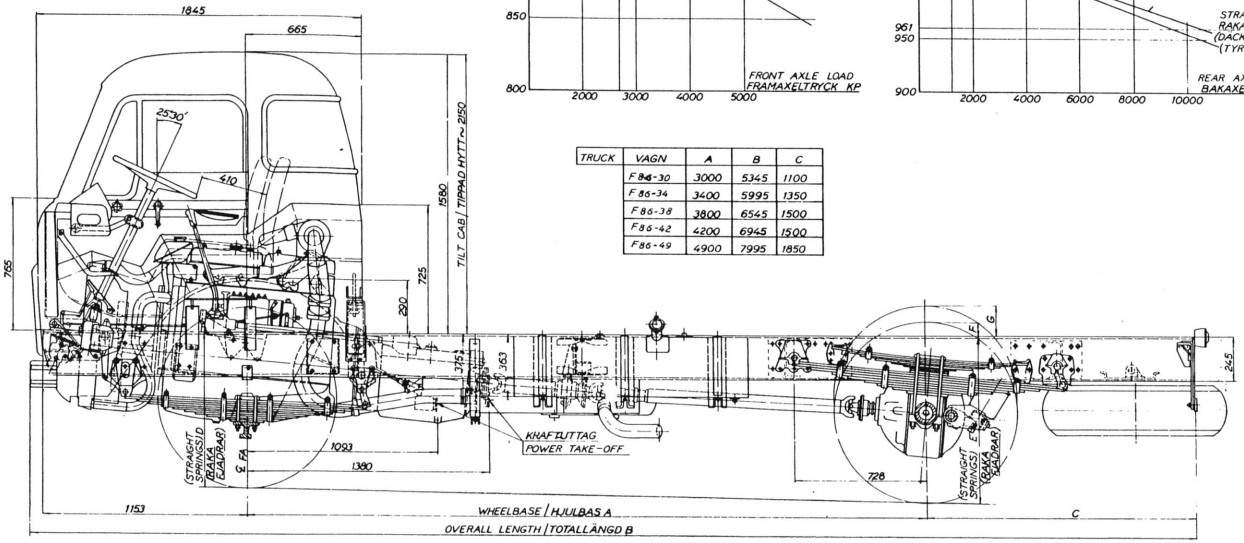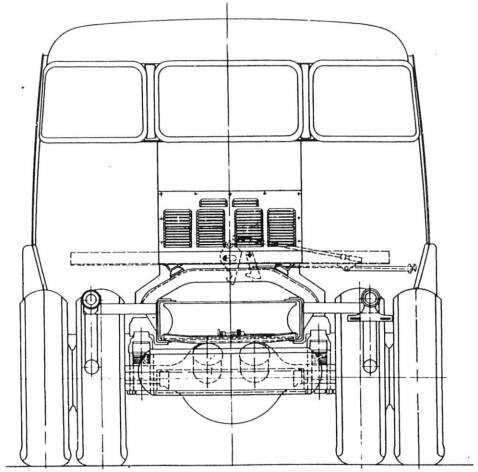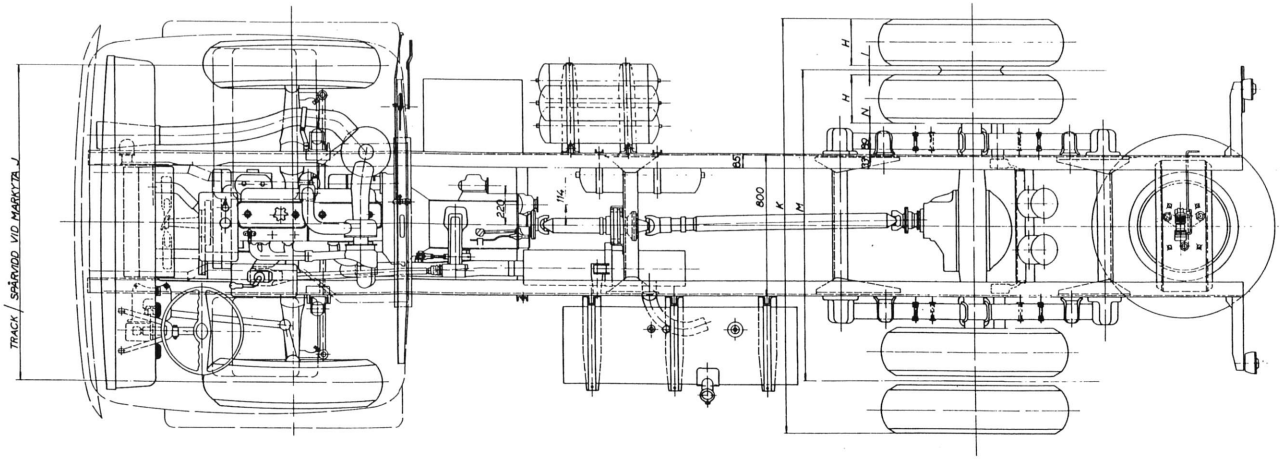
TRUCK	VAGN	A	B	C
F 86-30	3000	5345	1100
F 86-34	3400	5995	1350
F 86-38	3800	6545	1500
F 86-42	4200	6945	1500
F 86-49	4900	7995	1850